BSc. (Hons.) Engineering in Information and Communication Engineering (ICE)

**Chapter 04 : Results and Discussion**

# EEE3305-Engineering Research (Embedded Systems) Project


**Student Name: J.M.Widanegamage**

**Index No: 21UG0623**

**Student Name: K.P.G.H.D.Dissanayake**

**Index No: 21UG0618**


**Date of Submission:** 01/04/2024

- **Present the outcomes and results of the project.**

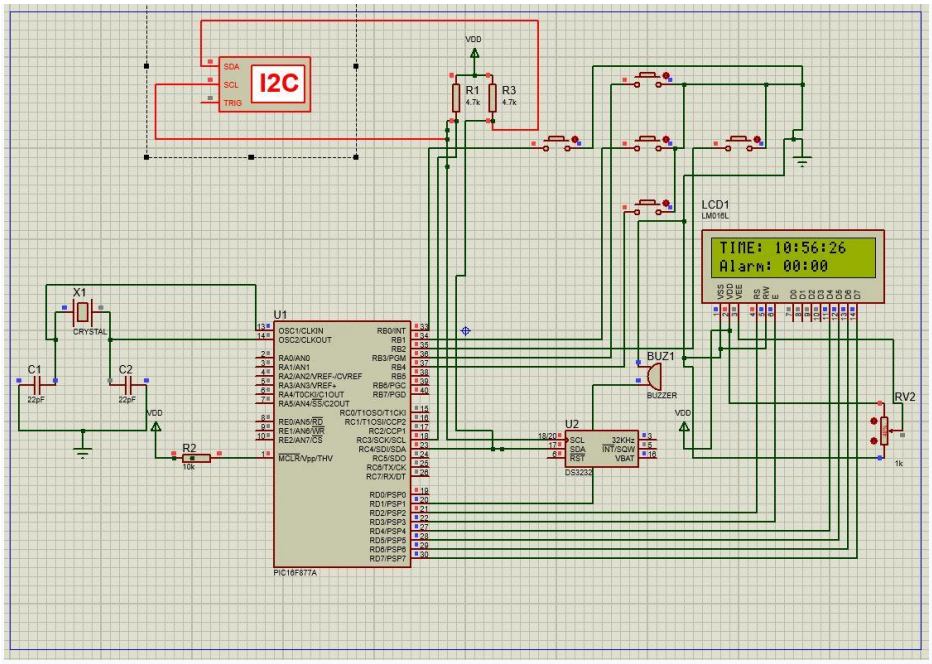


This simulation is represent our target project.But we can't find I2C Debugger component in any market.So we are get a meeting with Kasun sir. Later we are select a stopwatch for continue our project.

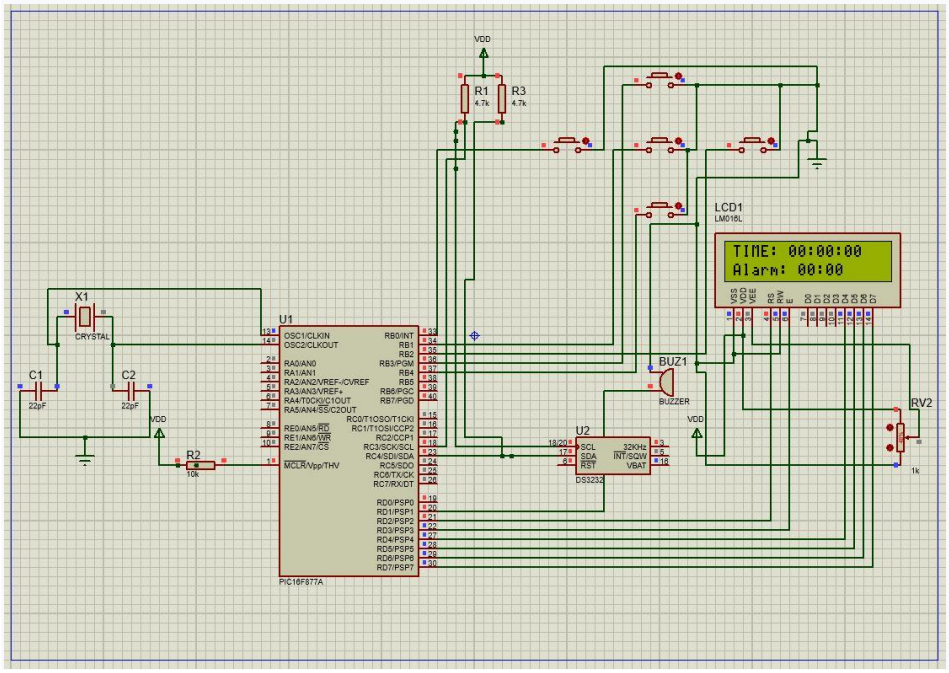

- **Analyze the findings about the project objectives.**

Build the circuit on the breadboard, get the code from the download link and compile it using MplabX compiler.

After the program is upload we saw the intro screen and then the time being display you can then use the push buttons to set the alarm time.

- **Discuss any unexpected results and their implications.**

When the alarm time matches with the current time the buzzer will start beeping to alarm the user. The project has a plethora of options to build upon. The RTC module can keep track of any time and date, so you can perform a scheduled task at any time/date required**.**

- **Compare your results to the existing literature and justify any deviations.**

The five push buttons will act as an input for setting the alarm for the required time. So one end of all the push buttons are connected to ground and the other ends are connected to PORTB pin, internal pull-up resistor will be used on these pins to avoid the pins floating. The Buzzer will act as an output and will give us a beep when the alarm gets triggered and is connected to the PORT S pin. The current time is always kept in track by the DS3231 RTC module from which the PIC receives the data through I2C bus, so the SCL and SDA pins of the RTC module is connected to SCL and SDA pin of the PIC controller. A LCD display is attached to the PORTD of the PIC which is used to display the current time and set time.